产 品 规 格 书
Product Specification

方形锂离子电池

Prismatic Lithium Ion Battery

型号：L173F314A

Model: L173F314A

中创新航科技股份有限公司
CALB Co., Ltd.

产 品 规 格 书
Product Specification

方形锂离子电池

Prismatic Lithium Ion Battery

型号：L173F314A

Model: L173F314A

修订履历

Revision Notes

版次 Version	日期 Date	变更内容 Modify Content	备注 Remark
A01	2023/03/24	初版	

目录 Content

1. 介绍 INTRODUCTION 1
1.1. 目的 Purpose 1
1.2. 保密 Confidentiality 1
2. 电池信息 CELL DATA 1
2.1. 电池外观 Cell Image 1
2.2. 单体电池尺寸 Cell Dimension 1
2.3. 产品图纸 Product Drawing 2
2.4. 产品识别 Cell Identification 2
2.5. 零部件设计 Part Design 3
2.6. 电池性能数据 Battery Performance Data 4
3. 电池工作以及安全限制 OPERATION AND SAFETY LIMIT ON CELL LEVEL 6
3.1. 电压限制 Voltage limit 6
3.2. 温度限制 Temperature Limit 7
3.3. 机械冲击加速度限值 Acceleration Limit for Mechanical Shock 7
3.4. 安全功能 Safety Function 7
4. 模组及系统设计以及过程注意事项 PARAMETER FOR MODULE DESIGN AND PROCESS 8
4.1. 可施加在极柱上的最大扭矩 Max Torque Which Can Be Applied to Terminal 8
4.2. 可施加在极柱上的最大力 Max. Force Which Can Be Applied to Terminal 8
4.3. 模块组装时的压缩参数 Compression Parameter During Module Assembly 8
4.4. 模组及系统焊接过程中温度的影响 Effect of Heat for Module Welding 8
4.5. 清洁要求 Cleaning Requirements 8
5. 危险警告、潜在故障及注意事项 HAZARD WARNINGS, POTENTIAL FAULTS AND MATTERS NEEDING ATTENEION 9
5.1. 危险和故障提醒 Danger and Fault Warning 9
5.2. 保护措施和行为规范 Protective Measures and Rules of Conduct 9

5.3. 电池测试和使用 Cell Testing and Use 10

5.4. 电池存储 Cell Storage 11

5.5. 电池运输 Cell Transportation 11

5.6. 电池管理系统的应用 Applications of Battery Management System (BMS) 11

5.7. 禁止事项 Prohibition 12

Product Specification of L173F314A

1. 介绍 INTRODUCTION

1.1. 目的 Purpose

本文件主要介绍了中创新航科技有限公司生产的锂离子动力电池的产品特性以及使用规范。

This document describes the characteristics and handling information of the rechargeable lithium-ion cell manufactured and supplied by CALB Co., Ltd.

1.2. 保密 Confidentiality

本文件所载信息仅供授权的个人或实体使用，内含涉密信息。任何针对本文件内容的披露、复制、分发或其他行为都是严格禁止的，甚至是非法的。

The information contained in this document is intended solely for the use of the individual or entity that is authorized to receive it. It contains confidential or privileged information. Any disclosure, copying, distribution or taking an action in reliance on the contents of this document is strictly prohibited and may be unlawful.

2. 电池信息 CELL DATA

2.1. 电池外观 Cell Image

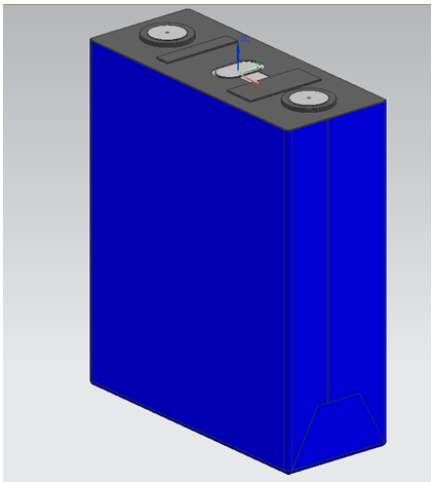

2.2. 单体电池尺寸 Cell Dimension

项目 Items	描述 Description	尺寸 (mm) Dimensions (mm)	备注 Remark
W	宽度 Width	174.4±0.8mm	/
T	厚度 Thickness	71.4±0.5mm （40%SOC，300±20Kgf）	厚度尺寸测量条件：40%SOC, 300±20 kgf Measurement conditions for thickness
H	高度 Height	207.0±0.5mm，含极柱极 with terminal	/
		204.45±0.8mm，不含极柱极 without terminal	/
加强筋 Strength Bar	高度 Height	0.11mm	加强筋顶部至电池肩部高度 The top surface of ”Strength Bar” to the shoulder of cell

2.3. 产品图纸 Product Drawing

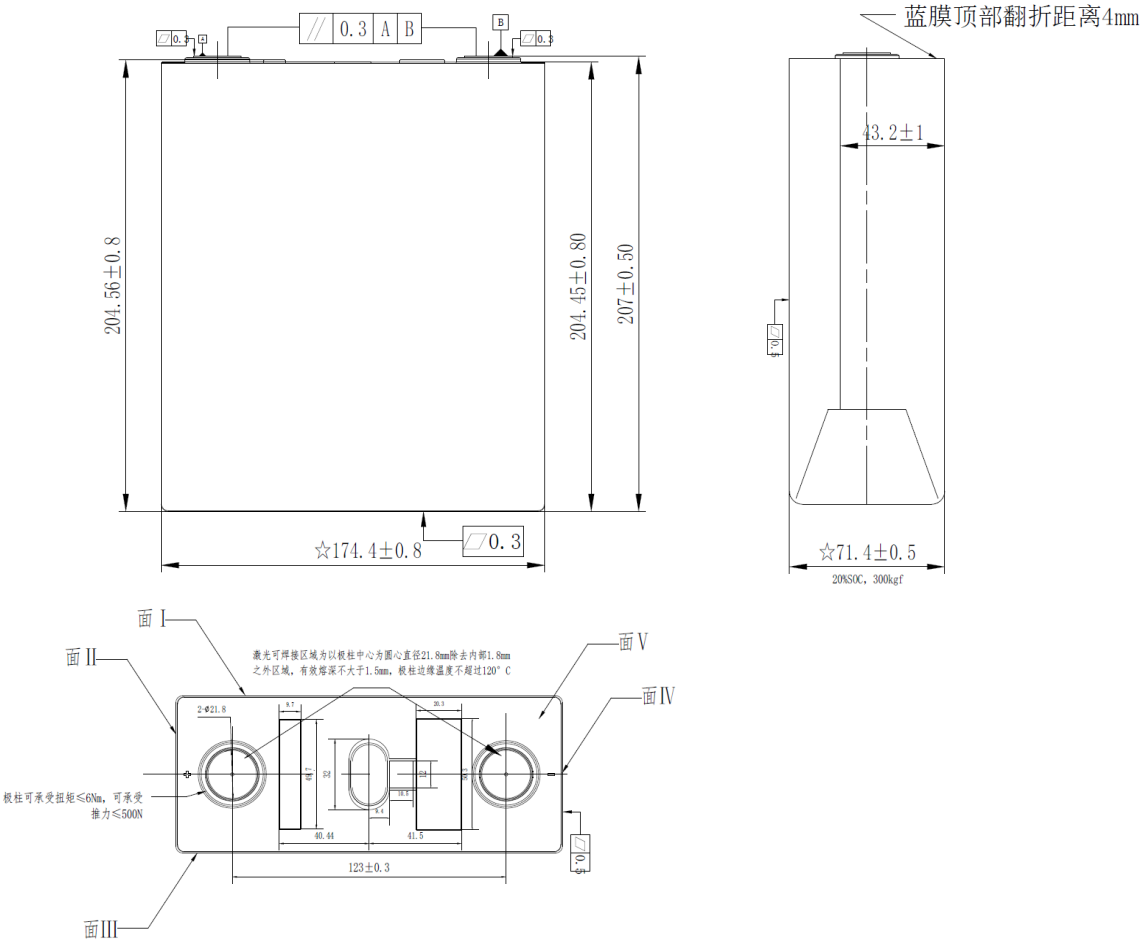

二维图纸

2D Drawing

2.4. 产品识别 Cell Identification

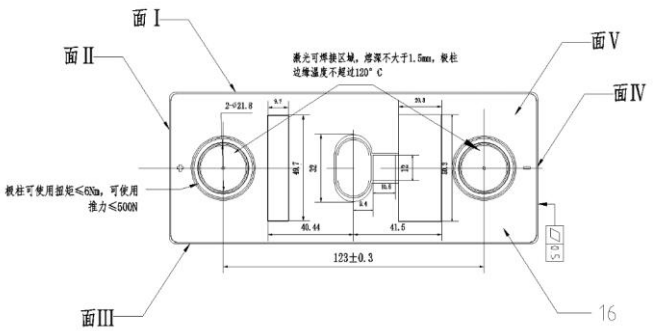

电池顶部的盖板正负极极柱与安全阀之间位置存在宽、窄各一处凸台设计—“加强筋”，电池顶部盖板表面上同时有二维码和编码，其信息一致。

The “Strength Bar ” are both located between Negative/Positive terminal and Safety Vent. The DMC code and ID numbers imply the same information and both are inscribed on the cap plate.

2.4.1. 正负极极柱区分 Identification of Positive and Negative Terminal

符号“+”表示正极极柱，符号“-”表示负极极柱。

The symbol "+" indicates the positive pole, and the symbol "-" indicates the negative pole.

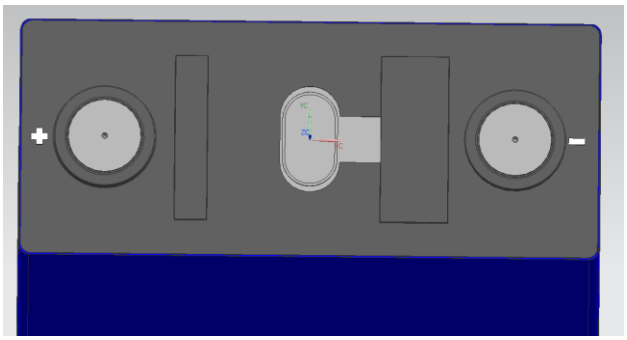

2.4.2. 电池表面信息 Cell Surface Condition

电池侧面区域为 PET 绝缘膜覆盖（蓝色）；

电池顶部除了防爆阀、二维码、正负端子外，均被 PC 绝缘盖板覆盖（黑色）；

电芯底部区域为 PET 绝缘膜（蓝色，U 型包膜）；

Cell surface side is covered with PET insulation tape (blue color).

Cell surface top is covered with PC top insulation film except vent, DM-code, rivet terminal.

The rest area is covered with the insulation tape by U-type sticking manner.

2.5. 零部件设计 Part Design

2.5.1. 壳体 Can

零部件 Parts	材质 Material	备注 Mark
壳体 Can	Al3003 H14	
绝缘膜 Insulation tape	材料：PET 颜色(Color): 蓝色(Blue) 厚度(Thickness): 0.08 mm	U 型包膜 U-type horizontal sticking
正极柱 Positive terminal	Al 1060 H14	
负极柱 Negative terminal	Al 1060 H112&Cu T2	
绝缘顶板 Top insulation film	材料：PC，厚度：0.3 mm，黑色（Black） Material: PC，Thickness: 0.3 mm	参考下图 As Picture followed

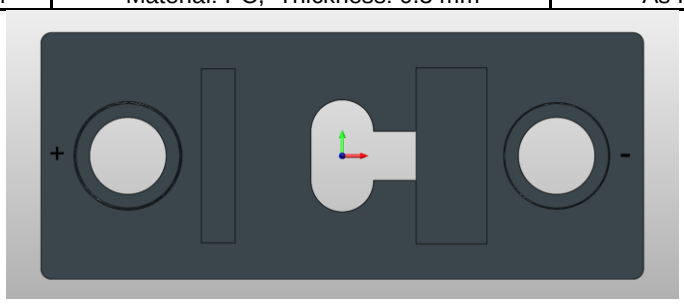

2.6. 电池性能数据 Battery Performance Data

2.6.1. 基本参数 Basic Parameter

序号 NO.	项目 Items		参数说明 Parameter	备注 Remarks
1	额定容量 Rated Capacity		314 Ah	标准放电 Standard Discharge
2	额定电压 Rated Voltage		3.2 V	标准放电 Standard Discharge
3	额定能量 Rated Energy		1004 Wh	标准放电 Standard Discharge
4	电池重量 Cell Weight		5.60±0.15 kg	/
5	质量能量密度 Mass Energy Density		179Wh/kg	标准放电 Standard Discharge
6	电池体积 Cell Volume		2.55L, 不含极柱 (without terminal)	/
7	体积能量密度 Volume Energy Density		394 Wh/L	标准放电 Standard Discharge
8	内阻（ACR） Alternating Current Resistance		≤0.35 mΩ	40%SOC，室温，交流阻抗, 1000 Hz 40%SOC, Room Temperature, AC Impedance, 1000 Hz
9	温度范围 Temperature Range	充电温度 Charging Temperature	0~55°C	/
		放电温度 Discharging Temperature	-30~55°C	/
		存储温度 Storage Temperature	-30~60°C	/
10	电压范围 Voltage Range		2.5~3.65 V	0℃＜T≤55℃
			2.0~3.65 V	-30℃≤T≤0℃

说明：

1）标准充电：在 25±2℃环境下，以 0.5P（502.4W）恒功率充电至单体电芯电压上限后，停止充电，并且在下一个工步开始前需静置 30 分钟；

2）标准放电：在 25±2℃环境下，以 0.5P（502.4W）恒功率放电至单体电芯电压下限后，停止放电，并且在下一个工步开始前需静置 30 分钟。

Instructions:

1) Standard charge: At the temperature of 25 ± 2 ℃, charge the cell at a constant power of 0.5P (502.4W) until the voltage of the single cell is up to upper voltage limit, and then stop charging. The cell needs to stand for 30 minutes before the next work step.

2) Standard discharge: At the temperature of 25 ± 2 ℃, discharge at a constant power of 0.5P (502.4W) until the voltage of the cell is up to lower voltage limit, and then stop discharging. The cell needs to stand for 30 minutes before the next work step.

2.6.2. 安全测试 Safety Test Results

项目 Item		测试条件 Test condition	EUCAR Level	备注 Remark
机械滥用 Mechanical Abuse	挤压 Crush	1）挤压力达到 100 kN 或电池形变量达到 15%或电压为 0 V； 1）100 kN of extrusion or 15% of cell deformation or 0 V of cell voltage; 2）挤压方向:垂直于蓄电池极板方向施压； 2）Crush Direction：Press vertically in the direction of cell plate; 3） 挤压速度:5±1 mm/s。 3）Crush Speed: 5±1 mm/s.	Level 2	<EUCAR 等级划分> 0 级：无影响 1 级：自保护启动 2 级：有影响/损坏 3 级：泄露，质量减少<50% 4 级：泄露，质量减少>50% 5 级：起火或燃烧 6 级：破裂 7 级：爆炸 <EUCAR safety level > Level 0: No effect Level 1: Passive protection activated Level 2: Defect/Damage Level 3: Leakage, Δ mass < 50% Level 4: Venting, Δ mass > 50% Level 5: Fire or Flame Level 6: Rupture Level 7: Explosion
	振动 Vibration Test	1）将测试对象安装在振动台上； 1）Install the test object on the vibration table; 2）对 XYZ 三个方向每个方向施加振动 8 h，振动测试参数按照附录 1 进行，振动曲线如附录 2，同时叠加一个温度工况，温度参数见附录 3； 2) Vibration is applied to each of the three directions of XYZ for 8 h. Vibration test parameters are carried out in accordance with Appendix 1. The vibration curve is shown in Appendix 2, a temperature condition is superimposed, and the temperature parameters are shown in Appendix 3. 3）振动结束后静置 1h； 3）Stand for 1h after the vibration is over; 4）以标准电流对电池进行标准循环 3 次，确定振动后容量； 4) Conduct standard cycle for the cell for 3 times with standard current to determine the capacity after vibration; 5）按照标准测试方法测试电池内阻值。 5) Test the cell resistance according to the standard test method.	Level 2	
热滥用 Thermal Abuse	热稳定性 Thermal Stability	1）100% SOC，5℃/min 的升温速率从 25℃加热到 130℃，然后保持 30 分钟。 1）100% SOC, heat from 25℃ to 130℃ at a heat rate of 5℃ /min and stay 30 min.	Level 2	
电滥用 Electrical Abuse	过充 Overcharge	1）100% SOC，1C 恒流充电至截止电压的 1.5 倍时停止充电，观察 1 小时。 1）100% SOC, 1C constant current charge to 1.5 times of the cut-off voltage, quit charging and observe 1 h.	Level 4	
	过放 Over Discharge	1C 恒流放电，90min CC discharge, 1C, 90min	Level 2	
	外短路 External Short Circuit	1）100% SOC，电池外短路 10 min，短路电阻小于 5 mΩ，观察 1 小时。 1）100% SOC, 10 min of cell external short circuit and the external short circuit resistance is less than 5 mΩ, observe 1 h.	Level 2	

2.6.3. 环境类测试结果 Environmental Test Results

项目 Item	测试条件 Test Condition	测试结果 Test Result
跌落测试 Drop Test	1）100% SOC，电池正负端子向下从 1.5 m 高度处自由跌落到水泥地面上，观察 1 小时。 1）100% SOC, two terminals of cell faces down from a height of 1.5 m onto the cement floor and observe 1 h.	Level 2
温度循环 Temperature Cycle	1）100% SOC，单体电池放入温度箱中，温度箱温度按照附录 4 和附录 5 进行调节，循环次数 5 次，观察 1 小时。 1）100% SOC, cell was put into the temperature box, and temperature of the temperature box was adjusted according to Appendix 4 and Appendix 5 for 5 cycles, and observe 1 h.	Level 2
低气压 Low Pressure	1）100% SOC，单体电池放入低气压箱中，调节试验箱中气压为 11.6 kPa，温度为室温，静置 6 小时，观察 1 小时。 1）100% SOC , cell was put into a low-pressure chamber, air pressure was adjusted to 11.6 kPa in ambient temperature, stand for 6 h and observe 1 h.	Level 2
海水浸泡 Seawater Immersion	1）100% SOC，将单体电池浸入 3.5% NaCl 溶液（质量分数）中 2 小时，水深应完全没过单体电池，观察 1 小时。 1）100% SOC, cell was immersed in 3.5% (mass fraction) NaCl solution for 2 h, water depth should completely exceed height of the cell and observe 1 h.	Level 2

2.6.4. 存储测试结果 Storage Test Result

项目 Item	测试条件 Test Condition	30 天存储结果 Storage Results for 30 Days		80%SOH 存储时间 Storage duration with 80% SOH
25℃存储 Storage at 25℃	100% SOC，25℃存储, 每隔 30 天测一次容量保持率和恢复率 100% SOC , cell was put into a temperature box at 25℃, test capacity retention rate and capacity recovery rate every 30 days.	容量保持率 Capacity Retention Rate	≥97%；	≥180 天 ≥180 days
		容量恢复率 Capacity Recovery Rate	≥98%；	

2.6.5. 循环寿命 Cyclelife

温度 Temp.	循环工况 Cycle Condition	循环要求 Requirement
25℃	充电：以 0.5P 恒功率充电至 3.65V 截止，静置 30 分钟； Charge：Constant current as per 0.5P charge to 3.65V； 放电：以 0.5P 恒功率放电至 2.5V 截止，静置 30 分钟。 Charge：Constant current as per 0.5P discharge to 2.5V, cut-off, rest 30min.	≥ 9000 cycles @ 80%SOH

3. 电池工作以及安全限制 OPERATION AND SAFETY LIMIT ON CELL LEVEL

3.1. 电压限制 Voltage limit

充放电电压限制 Voltage limit of charge and discharge

限制 Limit	项目 Item	数值 Value	备注 Remark
安全限制 Safety limit	充电电压 Charging voltage	3.8V	/
	放电电压 Discharging voltage	1.8V	/
工作限制 Operation limit	充电电压 Charging voltage	3.65 V	/
	放电电压 Discharging voltage	2.5 V (T＞0℃) 2.0 V (≤0℃)	/

说明：工作电压以及安全限制电压以模组或者 pack 中的最低温度为准。

Operation voltage and safety voltage limit is applied depending on the minimum module temperature.

3.2. 温度限制 Temperature Limit

项目 Items		工作限制 Operation limit	安全限制 Safety limit
温度范围 Temperature Range	充电温度 Charging Temperature	0~55°C	0~60°C
	放电温度 Discharging Temperature	-30~55°C	-40~60°C
	存储温度 Storage Temperature	-30~60°C	-40~65°C

说明：当超过安全限制的温度进行充放电或者存储，电池可能会存在安全隐患。

Instructions: When the temperature exceeds the safety limit for charging, discharging or storage, the battery may have potential safety hazards.

3.3. 机械冲击加速度限值 Acceleration Limit for Mechanical Shock

Y 方向 direction : ±60g；

X, Z 方向 direction: ±35g；

持续时间 Duration: 30ms；

3.4. 安全功能 Safety Function

3.4.1. 安全阀 Safety Vent

1)功能 Function: 在安全事故中释放电池内部压力 Degassing during safety event to maintain inner pressure in a cell low.

2)排气面积 Degassing area: 1282mm^2

位置 Location	长度/mm Length/mm
A	12
B	1.95
C	1.65

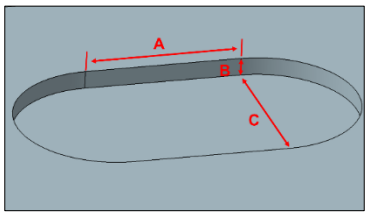

4. 模组及系统设计以及过程注意事项 PARAMETER FOR MODULE DESIGN AND PROCESS

4.1. 可施加在极柱上的最大扭矩 Max Torque Which Can Be Applied to Terminal

扭矩强度：相切于极柱圆柱面 XY 方向最大 6 Nm。

Torque strength: tangent to the cylindrical surface of the pole, the maximum is 6 Nm in the XY direction.

4.2. 可施加在极柱上的最大力 Max. Force Which Can Be Applied to Terminal

极柱可承受力：≤800 N （x,y 方向），≤800（z 方向）。

Static force at terminal: Max. 800 N in x, y axis (2h), Max. 800 N in z axis (2h).

4.3. 模块组装时的压缩参数 Compression Parameter During Module Assembly

大面挤压力： ≤800 kgf

Large surface extrusion：≤800 kg

4.4. 模组及系统焊接过程中温度的影响 Effect of Heat for Module Welding

4.4.1 允许焊接区域 Allowable Welding Area:

允许焊接区域：定位孔以外的其他极柱区域
Allowed welding area: On terminal area without the locating hole, module welding is allowed.

4.4.2 焊接对极柱高度的影响 Influence of Welding on Pole Height.

焊接温度：焊接过程中，探测点温度（极柱底部）不能超过 120℃；
Welding temperature: The welding temperature at the sensing point(terminal bottom side) should be below 120℃

4.5. 清洁要求 Cleaning Requirements

4.5.1 工作环境清洁 Cleanliness of Work Environment

严格按照 6S 管理规定对集成区域进行清洁，规范所领物资的管理，分类摆放、标识清晰，杜绝物品杂放、堆放。依照工艺文件准备生产工具。

The integrated area should be cleaned in strict accordance with 6S management regulations, and the management of received materials should be standardized. The materials should be placed in categories and clearly marked to prevent miscellaneous storage and stacking. Prepare production tools according to process documents.

4.5.2 电池清洁 Cell Cleaning

在模组或 pack 装配前，应当清理电池表面表面异物，并且用磨头打磨电池极柱，以表面光滑，能看到极柱本色为标准，极柱打磨完成后用风枪清除极柱表面杂物。

Cell should be cleaned after the arrival at customer and before module and pack assembly in order to remove foreign matter on the cell surface. In addition, the battery pole should be polished with a grinding head until the surface becomes smooth and the natural color of the pole appeals. After the pole is polished, remove the sundries on the surface of the pole with an air gun

5. 危险警告、潜在故障及注意事项 HAZARD WARNINGS, POTENTIAL FAULTS AND MATTERS NEEDING ATTENEION

5.1. 危险和故障提醒 Danger and Fault Warning

1）如果接触带电零部件，比如故障下的电池外壳，电弧会可能导致人员触电，并危害生命和健康（灼伤，心室颤动或者心跳停止）；

2）在失效情况下，可能泄露有机物质和酸类物质，并危害健康；而电解液等物质泄露，会对环境造成危害；

3）过压、欠压、在高温或高功率进行充放电、或者发生短路时候，可能引起爆炸和起火的危险；

4）由于制造过程原因，电池外壳可能有锐边，需要防止划伤。

1) In case of contact with live parts, such as battery shell in case of failure, electric arc may cause electric shock and endanger life and health (burns, ventricular fibrillation or cardiac arrest);

2) In case of failure, organic substances and acids may be leaked and endanger health; The leakage of electrolyte and other substances will do harm to the environment;

3) Over charge/discharge, charging and discharging at high temperature or high power, or short circuit may cause explosion and fire;

4) Due to the manufacturing process, the battery shell may have sharp edges, which need to be prevented from scratching.

5.2. 保护措施和行为规范 Protective Measures and Rules of Conduct

1）在对电池进行操作时，必须具备电池基本知识，或者在专业人员的监督下进行此类操作。未得电池存储室管理员的允许，不得随意接近电池。

2）由于电池出现故障可能会发生泄露，释放有毒物质，为了避免发生意外，必须佩戴护目镜，绝缘手套，工作服以及口罩等。当电解液溅到皮肤上，立即脱下衣服，然后使用大量水冲洗。如果不小心溅到眼睛，立即使用温水冲洗眼睛至少五分钟，并接受专业医生的治疗。

3）在发生故障时，电池的金属外壳可能带电。电弧或人体负荷电流会产生危害，必须拿掉身上的金属物件。

4）电池应当远离明火，不可以与易燃物放置在一起，应当保持至少 2.5m 的安全距离。电池一般不会发生爆炸，但是有可能发生冒烟或起火，推荐使用沙子或者灭火器进行灭火，电池残渣需要等烟雾散尽再去处理。

5）当电池发生外部可见损伤的情况，如出现凹印、跌落、异味以及过热，电池应当立即断电和停止使用。失效电池需要等温度恢复到常温再转移走。

1) When operating the battery, it’s necessary to have basic knowledge of the battery or carry out such operation under the supervision of professional personnel. Do not approach the battery without the permission of the battery storage room administrator.

2) Due to battery failure, leakage may occur and toxic substances may be released. In order to avoid accidents, goggles, insulating gloves, work clothes and masks must be worn. When electrolyte splashes on the skin, take off clothes immediately and rinse the skin out with plenty of water. If electrolyte is accidentally splashed on the eyes, immediately flush the eyes with warm water for at least five minutes and receive treatment from a professional doctor.

3) In case of failure, the metal shell of the battery may be charged. Electric arc or human body load current will cause harm, and the metal objects on the body must be removed.

4) The battery shall be kept away from open fire and shall not be placed with inflammables. A safe distance of at least 2.5m shall be maintained. Generally, the battery will not explode, but smoke or fire may occur, it's recommended to use sand or fire extinguisher to put out the fire. The battery residue needs to be treated after the smoke is cleared.

5) In case of external visible damage to the battery, such as gravure, drop, peculiar smell and overheating, the battery shall be powered off immediately and stopped using. The failed battery needs to be transferred after the temperature returns to normal state.

5.3. 电池测试和使用 Cell Testing and Use

5.3.1 电池测试 Cell Testing

1）使用前如果极柱变脏，需要用干布擦拭干净。擦不干净的话需要使用砂纸打磨极柱表面，去除氧化层，防止接触不良、影响载流能力。

2）在使用连接片连接电池时，建议使用铝制连接片，并且要保证接触位置产生的压降小于 3mV，否则可能因为接触阻抗大而产生较大的发热问题。

3）电池测试室需要保持干燥、通风，并且应该在醒目的位置张贴警告标识，不允许让所有人可以自由出入，接触电池以及其他带电部件。

4）在电性能和安全性能测试期间，仅测试人员可以停留在测试划定的区域，其他人不得入内。在测试过程中必须保持对电池的实时数据监测。测试区域需要有灭火工具、通风系统以及火灾报警器。

5）电池测试过后，需要用绝缘胶带覆盖极柱。

6）测试电池的报废处理必须遵从当地的环保规定。

1) If the pole becomes dirty before use, wipe it with a dry cloth. If it cannot be cleaned, the surface of the pole column needs to be polished with sandpaper to remove the oxide layer to prevent poor contact and affect the current carrying capacity.

2) When using the connecting piece to connect the battery, it is recommended to use the aluminum connecting piece, and ensure that the voltage drop generated at the contact position is less than 3 mV, otherwise there may be a large problem of heating due to the high contact impedance.

3) The battery test room shall be kept dry and ventilated, and warning signs shall be posted in an eye-catching position. It is not allowed for everyone to enter and contact the battery and other live parts.

4) During the electrical performance and safety performance test, only testers can stay in the area designated by the test, and others are not allowed to enter. Real time data monitoring of the battery must be maintained during the test. Fire fighting tools, ventilation system and fire alarm are required in the test area.

5) After the battery test, the pole needs to be covered with insulating tape.

6) The scrapping of test batteries must comply with local environmental regulations.

5.3.2 电池充放电 Battery Charge and Discharge

1）电池需要使用专门或者指定的充电器进行充电，并且只应用于专业领域。

2）电池充放电电压、最大充放电电流不允许设置在规格书规定的范围外，禁止过充过放，禁止反向充电。当充放电到达截止电压或截止电流时，必须停止进行充放电。如果电池在指定时间或容量内未完成充电，则停止充电。

3）电池应当安装电池管理系统，防止电池过充过放的发生，以免电池报废并且产生安全隐患。

4）当电池进行长期存储时，为了预防因为自放电产生的过放问题，需要定期对电池补充电量，让电池保持在 20%以上的荷电状态。若电池要存储很长一段时间，应当将电池用使用设备上取下来，转入适合存储的环境中存储。

5）在使用电池前，应充分阅读电池或者设备的用户手册。

6）当长时间不使用电池后，电池不能进行充电和工作，应停止工作，并且咨询厂家售后。

1) The battery needs to be charged with a special or designated charger and is only used in professional fields.

2) The battery charging and discharging voltage and maximum charging and discharging current are not allowed to be set outside the scope specified in the specification. Overcharge, over discharge and reverse charging are prohibited. When the charge and discharge reach the cut-off voltage or current, the charge and discharge must be stopped. If the battery does not complete charging within the specified time or capacity, stop charging.

3) The battery management system shall be installed on the battery to prevent the occurrence of overcharge and discharge of the battery, so as to avoid the scrapping of the battery and potential safety hazards.

4) When the battery is stored for a long time, in order to prevent over discharge caused by self discharge, it is necessary to charge the battery regularly to keep the battery at a state of charge of more than 20%. If the battery is to be stored for a long time, it should be removed from the electrical equipment and transferred to an environment suitable for storage.

5) Before using the battery, it's necessary to fully read the user manual of the battery or equipment.

6) When the battery is not used for a long time and the battery cannot be charged, stop using and consult the manufacturer's after-sales service.

5.4. 电池存储 Cell Storage

电池贮存要求如下：

1）蓄电池应储存在温度为 5℃～35℃，干燥、清洁及通风良好的仓库内；

2）蓄电池应不受阳光直射，距离热源不得少于 2m；

3）蓄电池不得倒置及卧放，并避免机械冲击或重压；

4）长时间存放应处于 20-40% SOC 状态。

Battery storage requirements are as follows:

1) The storage battery shall be stored in a clean and well ventilated warehouse at a temperature of 5 ℃ ~ 35 ℃;

2) The battery shall not be exposed to direct sunlight and shall not be less than 2m away from the heat source;

3) The storage battery shall not be placed upside down or horizontally, and mechanical impact or heavy pressure shall be avoided;

4) The long-term storage shall be in 20-40% SOC state.

5.5. 电池运输 Cell Transportation

电池运输过程的要求如下：

1）电池应在 20%~70%荷电状态下包装成箱进行运输；

2）电池在运输中不得受剧烈机械冲撞、暴晒、雨淋，不得倒置；

3）电池在装卸过程中，应轻搬轻放，严防摔掷、翻滚和重压。

The requirements for battery transportation are as follows:

1) The battery shall be packed into boxes for transportation under 20% ~ 70% charge state;

2) During transportation, the battery shall not be subjected to severe mechanical impact, exposure to the sun and rain, and shall not be inverted;

3) In the process of loading and unloading, the battery shall be handled with care to prevent falling, rolling and heavy pressure.

5.6. 电池管理系统的应用 Applications of Battery Management System (BMS)

1）电池管理系统功能测试，需要按照工艺要求，对模块进行充放电，检测管理系统能否可以过充、过放保护。正常使用应当避免超过本规格书规定的电池使用范围的外的过充过放，以及低温充电，否则可能造成容量下降或者永久性破坏。

2）使用或测试过程中，电池系统如果存在单体电池电压异常、温度异常等不正常现象，应立即停止测试，待查明原因、异常原因解决后重新进行测试。测试完成后应把电池组充放至原状态。

3）客户应具有电池管理系统详细的设计方案，测试或使用过程中应做好数据记录，建立电池管理档案。

4）如果测试过程或使用结果存在异常，需及时向工艺人员进行反馈，工艺人员应及时协调设计人员进行解决。客户不可擅自修改电池管理系统的设计，以免影响电池的使用性能。

5）由于使用不当，造成容量下降或者永久性破坏，或者不具备完整的电池管理系统使用期限内的监测数据的，中创新航不承担产品质量保证责任。

1) For the function test of the battery management system, the module needs to be charged and discharged according to the process requirements to detect whether the management system can protect the battery from overcharge and overdischarge. During use, overcharge, over discharge and low-temperature charging beyond the scope of use of the battery specified in this specification shall be avoided, otherwise the capacity may be reduced or permanently damaged.

2) In the process of use or test, if there are abnormal phenomena such as abnormal voltage and temperature of single battery in the battery system, the test shall be stopped immediately, and the test shall be carried out again after the abnormal causes are found out and solved. After the test, the battery pack shall be adjusted to the original SOC state.

3) The customer shall have a detailed design scheme of the battery management system, make data records during testing or use, and establish battery management archives.

4) If there are abnormalities in the process of use or test, it is necessary to feed back to the process engineers in time, and the process engineers shall timely coordinate with the designer to solve them. Customers are not allowed to modify the design of the battery management system without authorization, so as not to affect the performance of the battery.

5) If the capacity is reduced or permanently damaged due to improper use, or there is no complete monitoring data within the service life of the battery management system, CALB shall not be responsible for product quality assurance.

5.7. 禁止事项 Prohibition

1）禁止将电池扔进火种或者置于热源附近，禁止将电池投掷或者浸泡在水中。

2）禁止将导电物体短接电池的正负极，不要将导电物体放置在电池附近，比如螺丝刀、钳子和电线等。

3）禁止用尖锐物件穿刺电池，不要用重物击打电池，不要踩踏、跌落电池，不要在电池表面进行焊接操作。

4）禁止在无专业人员指导下、非指定的环境中拆解电池。

1) It is forbidden to throw the battery into the fire or place it near the heat source, and it is forbidden to throw or soak the battery in water.

2) It is forbidden to short-circuit conductive objects to the positive and negative poles of the battery. Do not place conductive objects near the battery, such as screwdrivers, pliers and wires.

3) Do not puncture the battery with sharp objects, do not hit the battery with heavy objects, do not step on or drop the battery, and do not weld on the battery surface.

4) It is forbidden to disassemble the battery without the guidance of professional personnel and in an unspecified environment.

附录 Appendix

1.振动测试参数

Vibration test parameters

振动激励	宽带噪音
各空间轴的试验持续时间	8h
加速度有效值	30.8m/s2
频率 HZ	功率密度频谱（m/s^2）^{2}/HZ
5	0.884
10	20
55	6.5
180	0.25
300	0.25
360	0.14
1000	0.14
2000	0.14

2.振动曲线

Vibration curve

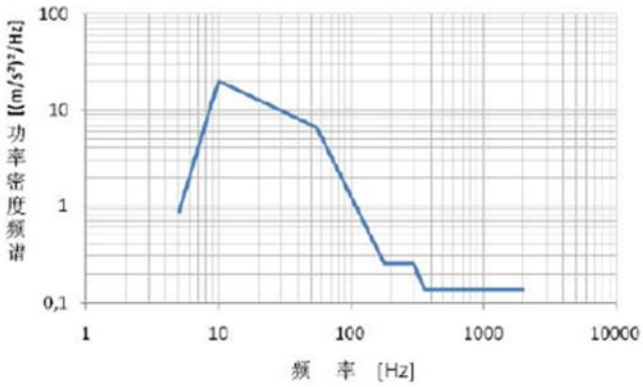

3.温度参数

Temperature parameters

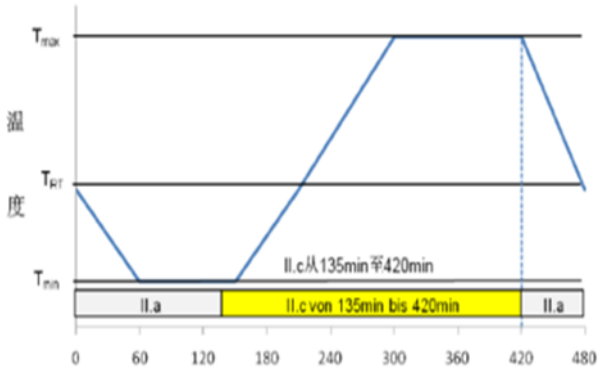

4. 温度循环试验：单次循环的温度和时间

Temperature cycle test: temperature and time for single cycle

温度（℃）	时间增量（min）	累计时间（min）	温度变化率（℃/min）

25	0	0	0
-40	60	60	13/12
-40	90	150	0
25	60	210	13/12
85	90	300	2/3
85	110	410	0
25	70	480	6/7

5. 温度循环试验示意图
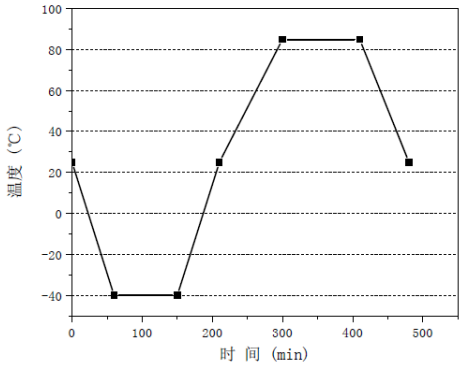
Schematic diagram of temperature cycle test